MULTiMO

1123 - COUPLE
1121D- LIFE OPTIONEL DESK

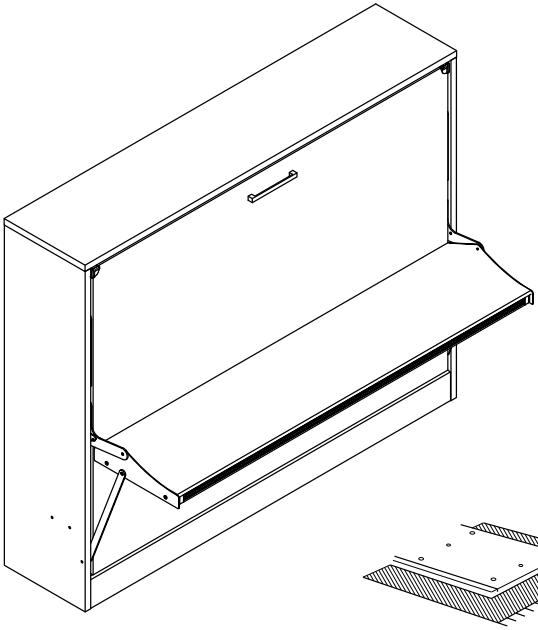

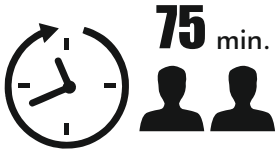

Technical Service

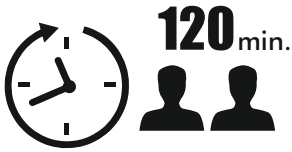

End User

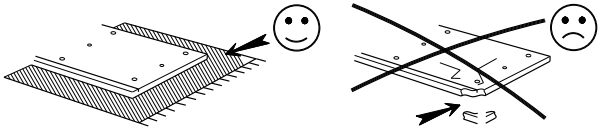

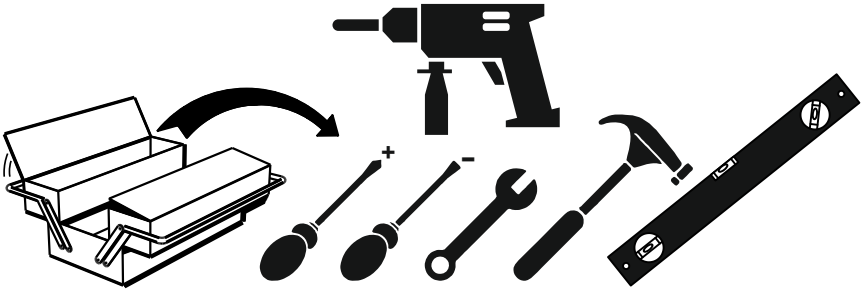

VIDEO

link

Assembly Instructions

MULTiMO

Track Title	Piece	(inch)			(mm)			
		Thickness	Length	Width	Piece	Thick	Height	Most
A-R / A-L	2	1,18	63,15	17,32	2	30	1604	440
B	1	1,18	79,61	17,36	1	30	2022	441
C	1	0,71	77,17	16,54	1	18	1960	420
D	1	0,71	77,17	5,31	1	18	1960	135
E-R / E-L	2	0,71	62,44	4,72	2	18	1586	120
F	1	0,71	62,44	4,72	1	18	1586	120
G	6	0,71	18,74	4,65	6	18	476	118
H	4	0,31	63,07	19,41	4	8	1602	493
K	1	0,71	75,98	56,81	1	18	1930	1443

Accessories List

MNX 02

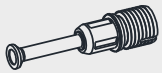

18 / piece

MNG - 01

18 / piece

KVL 01

52 / piece

TAP - 01

18 / piece

CT - 01 (6x40) mm

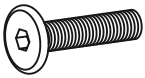

2 / piece

IM - 01 (6x30) mm

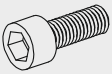

4 / piece

OT-054

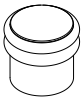

2 / piece

VD - 02 (3,5x25) mm

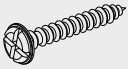

24 / piece

MKZ - 02

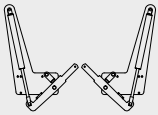

1 / piece 1000 N

VKP - 01 (22) mm

2 / piece

SC-61

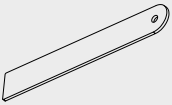

2 / piece

AVT - 01

12 / piece

VD - 01(6X70) mm

2 / piece

DSE - 02

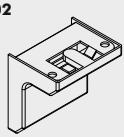

2 / piece

VD - 03 (3,5x18) mm

4 / piece

DD - 01 (R10)

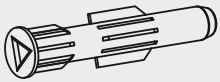

2 / piece

KP - 01 (224) mm

1 / piece

TTC 01

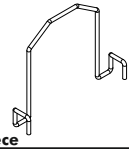

4 / piece

KKS - 01

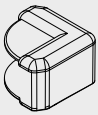

2 / piece

1123 - COUPLE

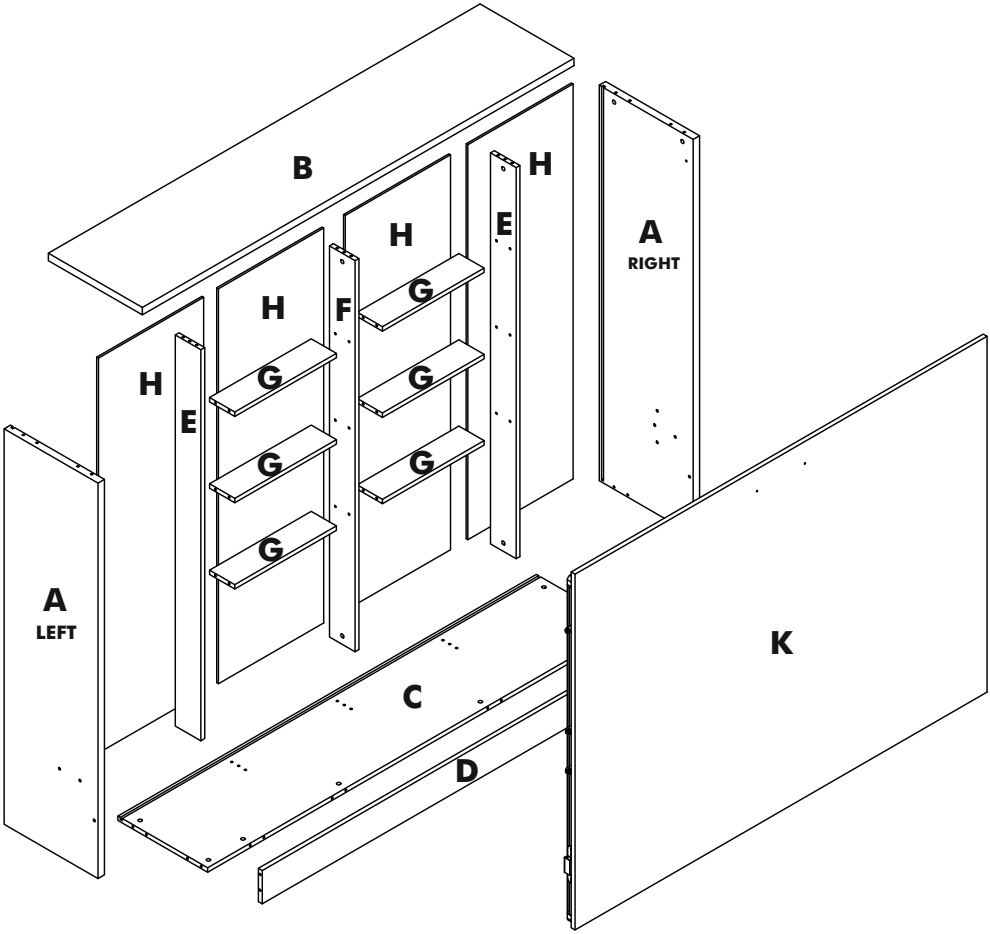

1121D- LIFE OPTIONEL DESK

Track Title	Piece	(inch)			(mm)			
		Thickness	Length	Width	Piece	Thick	Height	Most
DESK	1	0,71	75,75	17,72	1	18	1924	450

Accessories List

SC-132 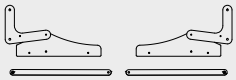 **1 / piece**	**CT - 02 (6x30) mm** 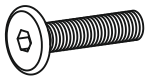 **2 / piece**	**CT - 01 (6x40) mm** 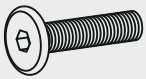 **4 / piece**	**CT - 04 (6x20) mm** 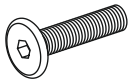 **2 / piece**
SN - 01 (M6) **5 / piece**	**OT-006** **3 / piece**	**SG - 01** **2 / piece**	**OT-076** 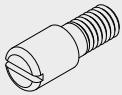 **1 / piece**
PLK-07 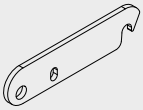 **1 / piece**	**PL - 01 (6x19x1) mm** **4 / piece**		

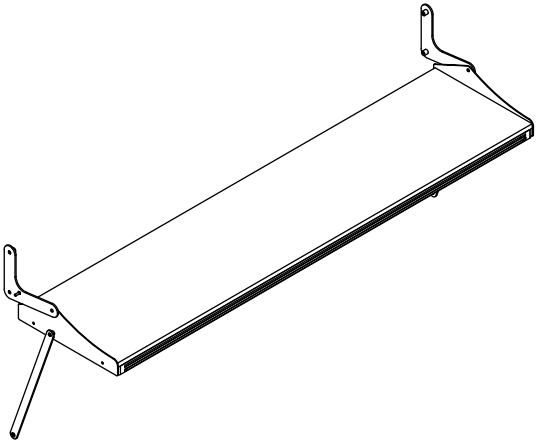

STEP 1

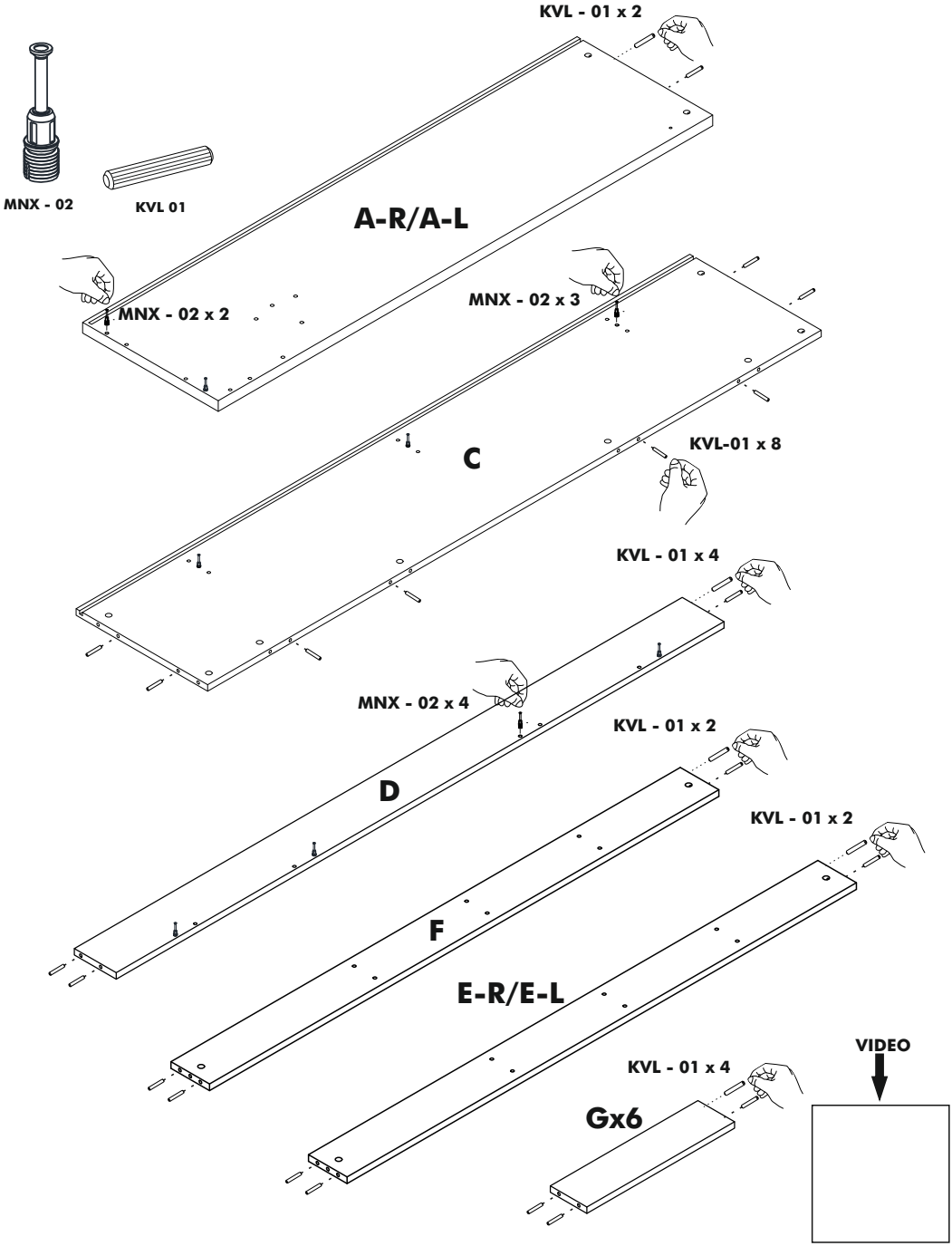
KVL - 01 x 2
MNX - 02
KVL 01
A-R/A-L
MNX - 02 x 2
MNX - 02 x 3
C
KVL-01 x 8
KVL - 01 x 4
MNX - 02 x 4
KVL - 01 x 2
D
KVL - 01 x 2
F
E-R/E-L
VIDEO
KVL - 01 x 4
Gx6

link

MULTiMO

STEP 2

MNX - 02

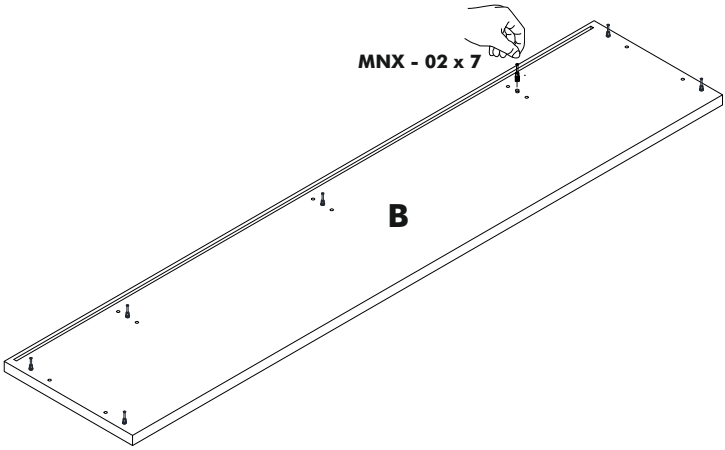

STEP 3

MNG - 01

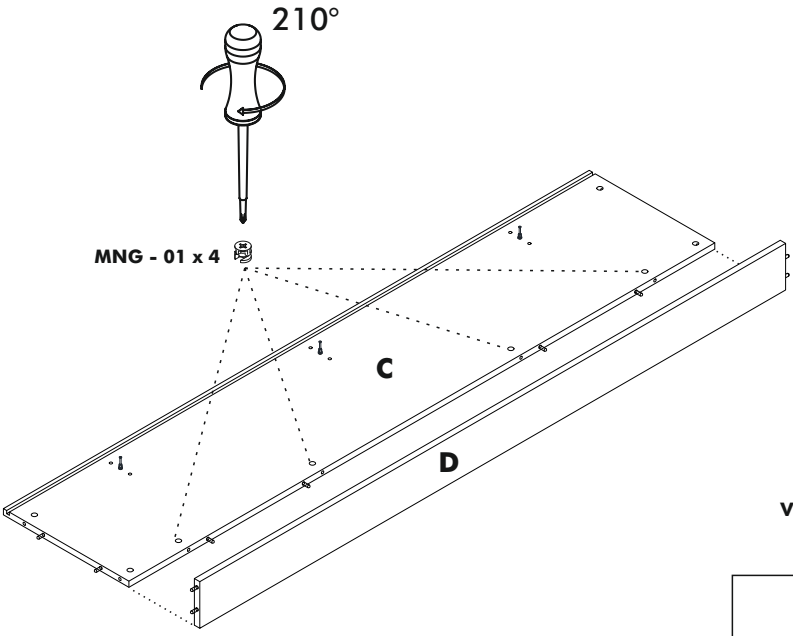

VIDEO

link

STEP 4

MNG - 01

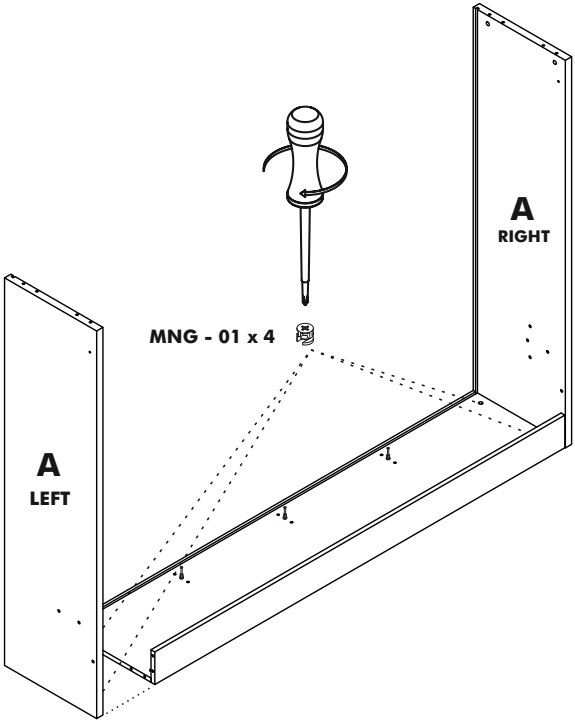

STEP 5

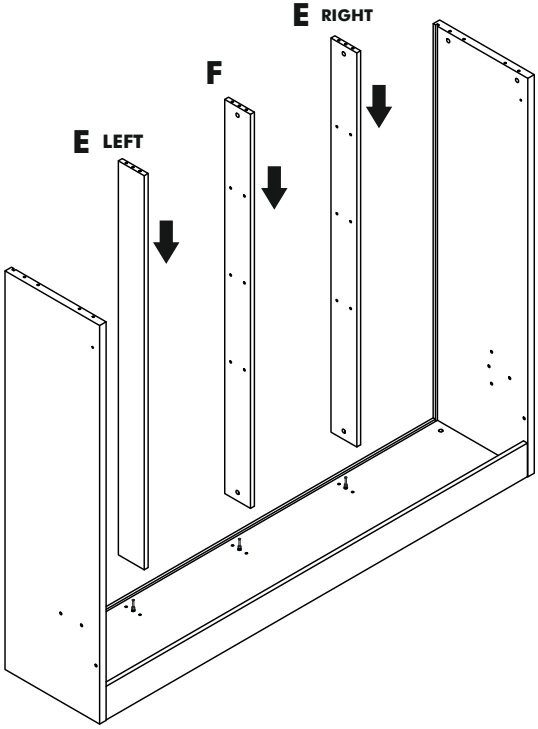

VIDEO

link

MULTiMO

STEP 6

MNG - 01

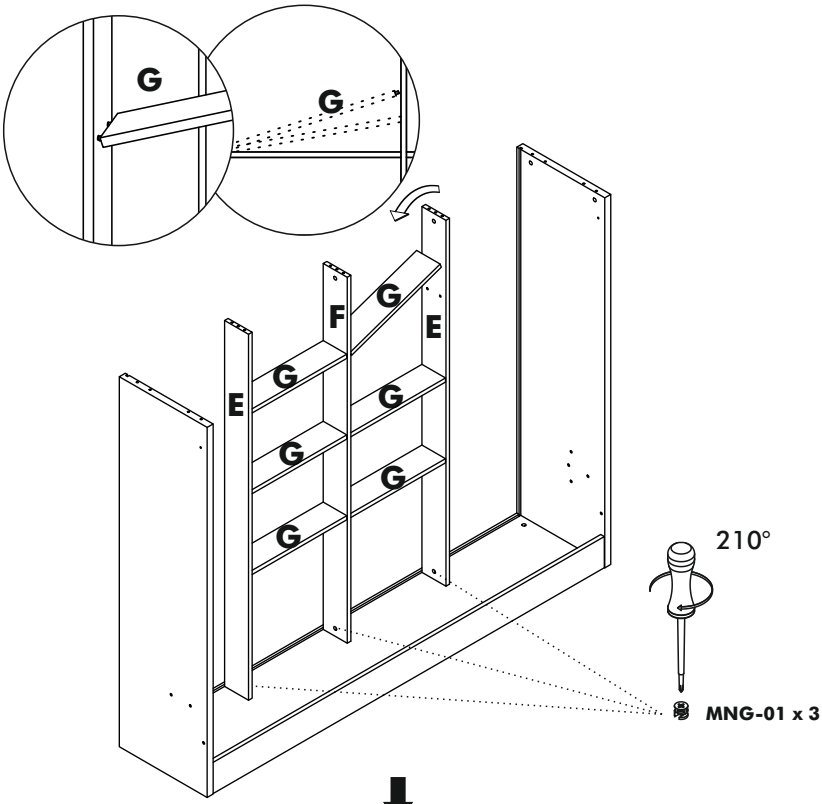

STEP 7

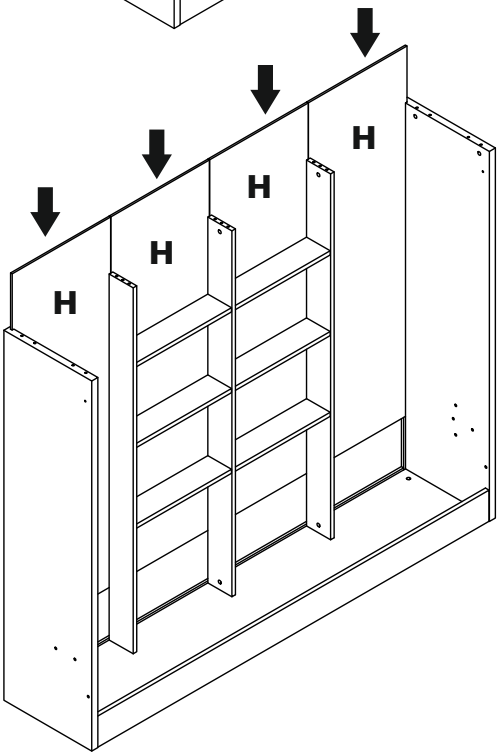

VIDEO

link

STEP 8

MNG - 01

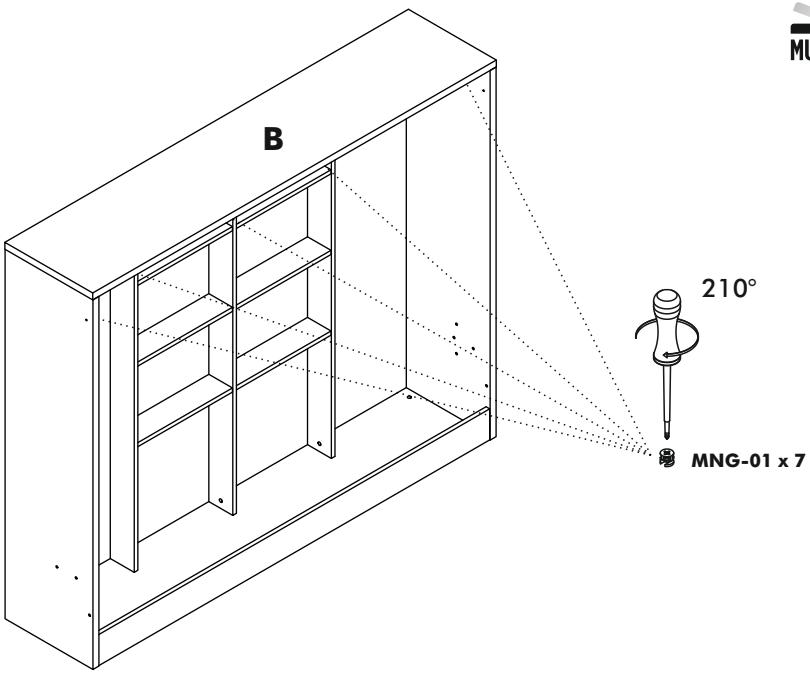

STEP 9

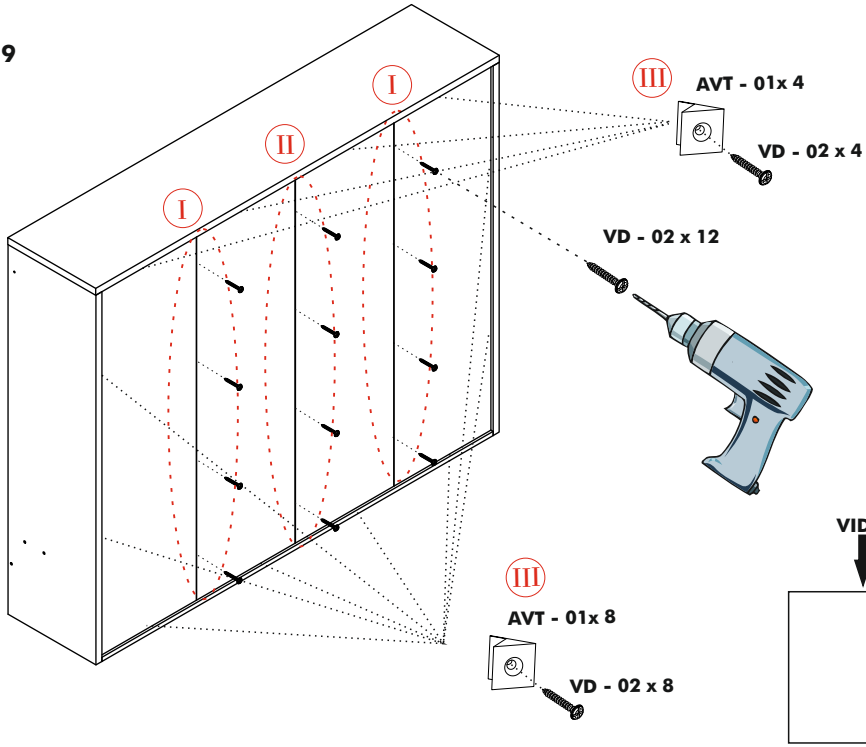

VIDEO

link

MULTiMO

STEP 10

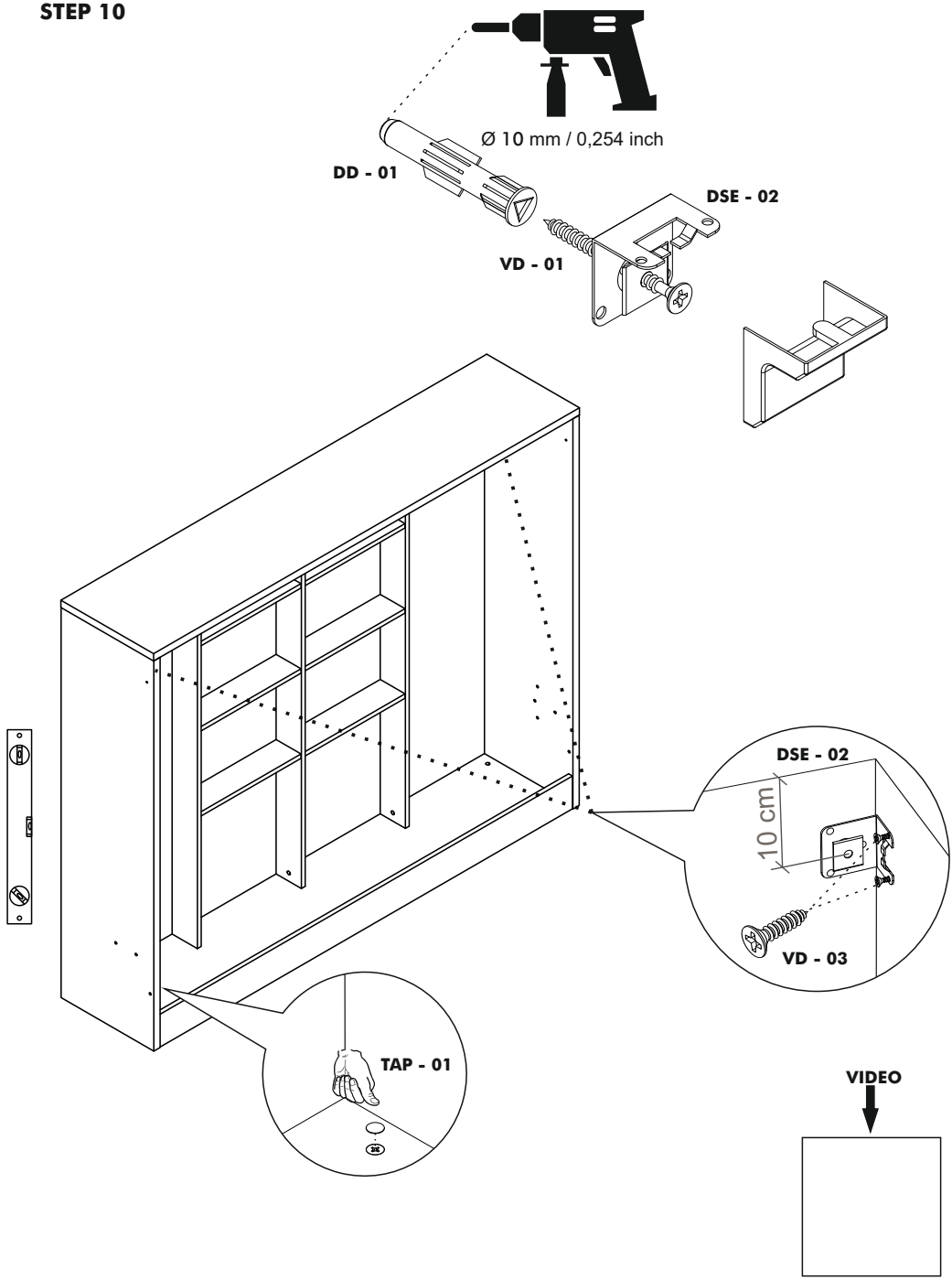

MULTiMO

STEP 11

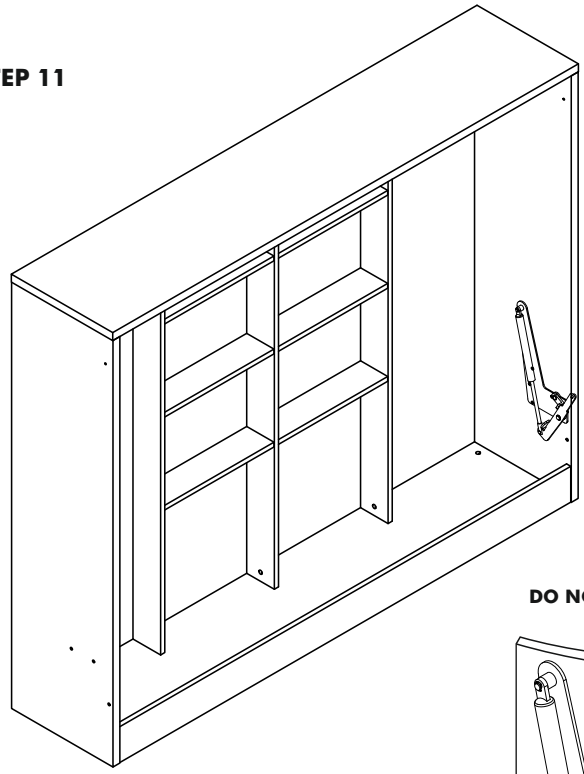

CAUTION

DO NOT UNLOCK BEFORE INSTALL

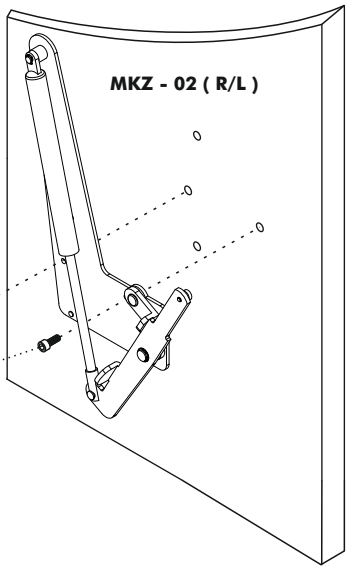

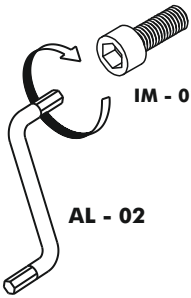

VIDEO

link

MULTiMO

STEP 12

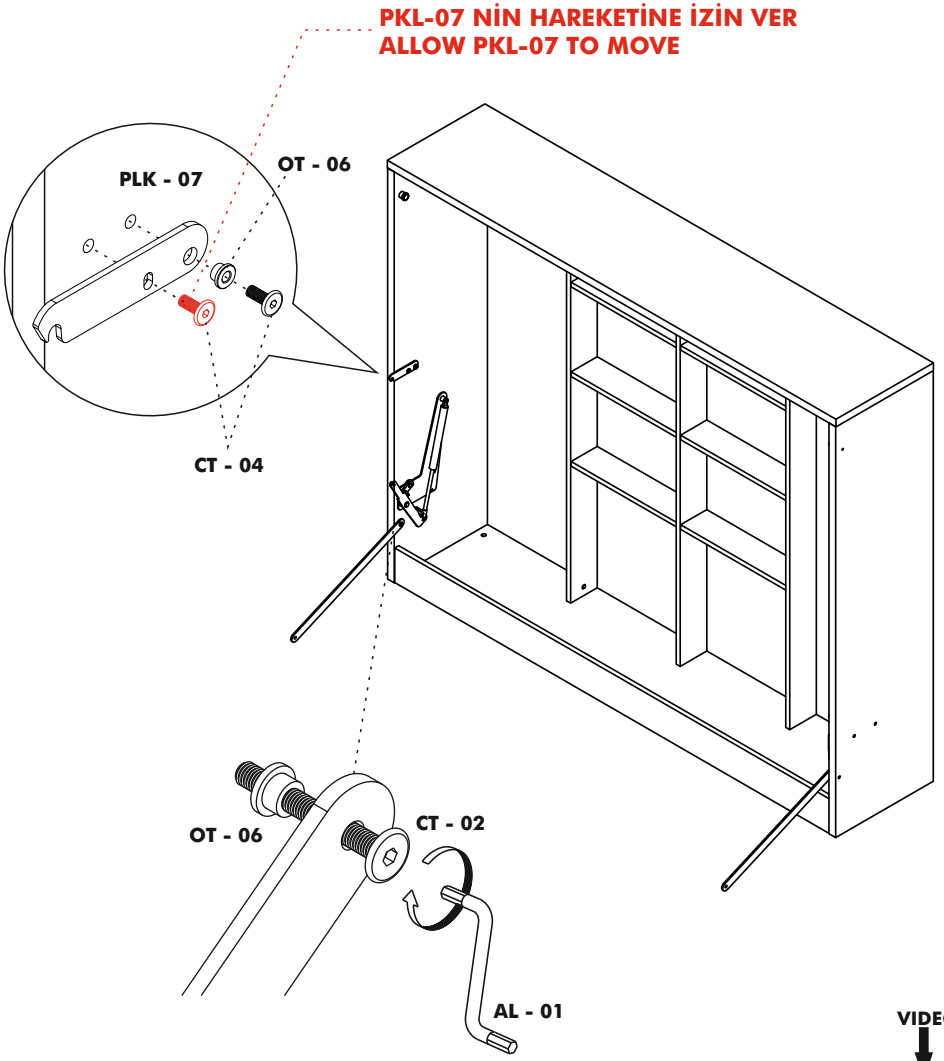

VIDEO

link

STEP 13

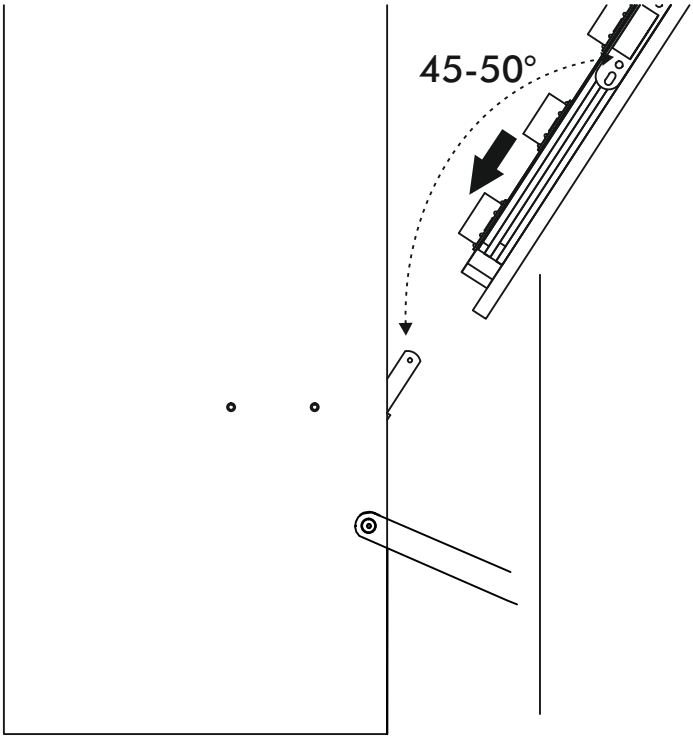

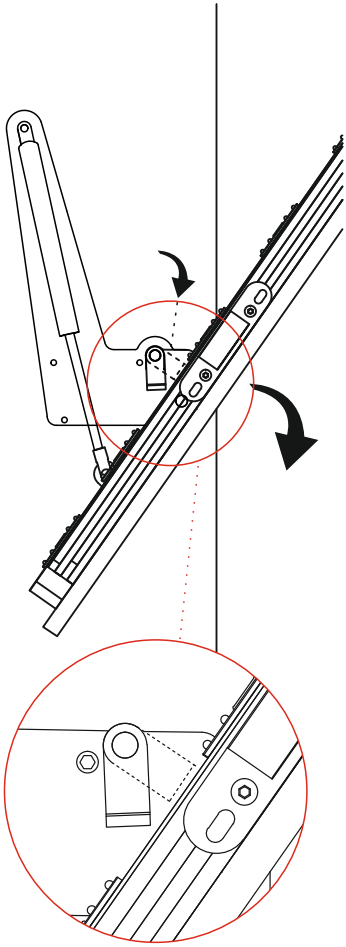

KAPAK KAPATILMADAN KİLİDİ İNDİRİN !!!
LET THE STOPPER LOCK MOVE DOWN !!!

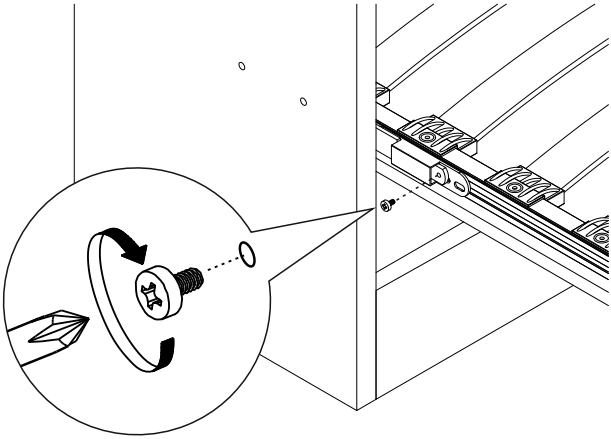

VIDEO

link

MULTiMO

STEP 15

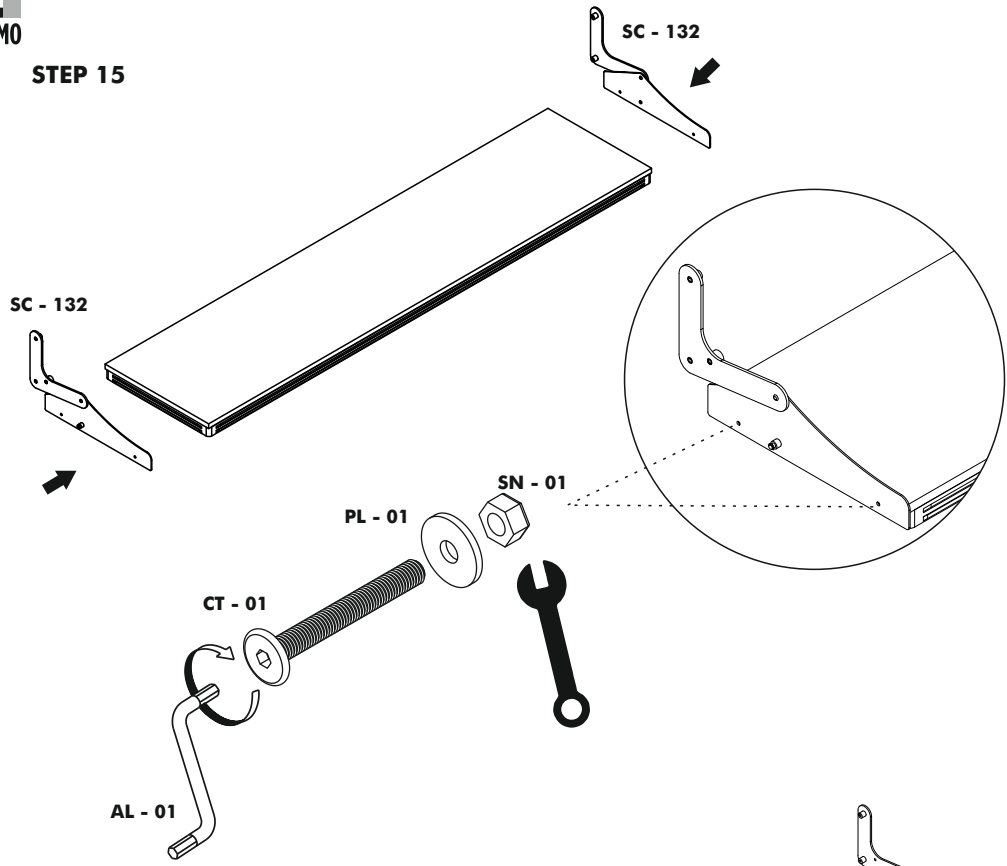

STEP 14

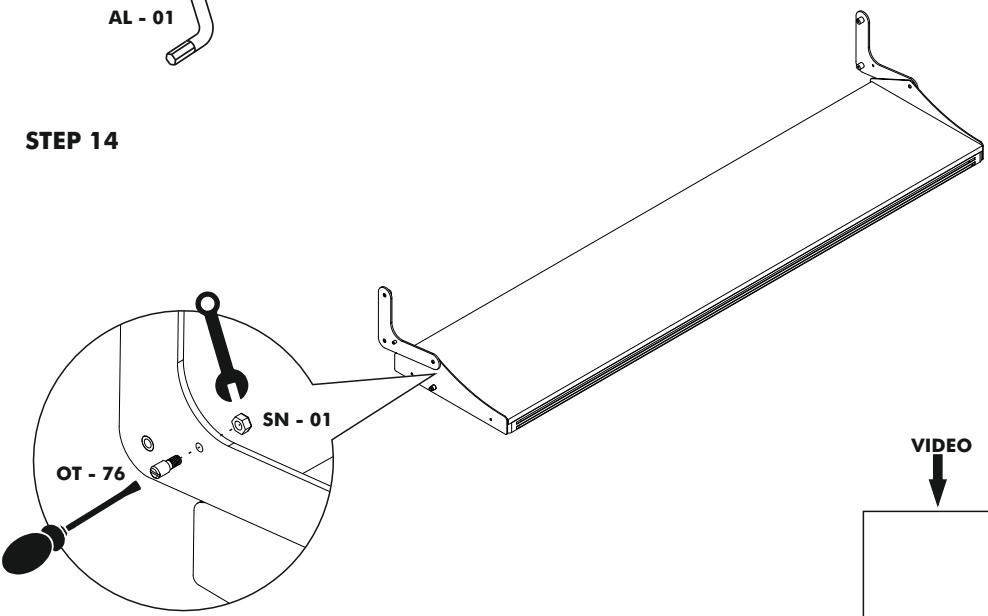

VIDEO

link

STEP 16

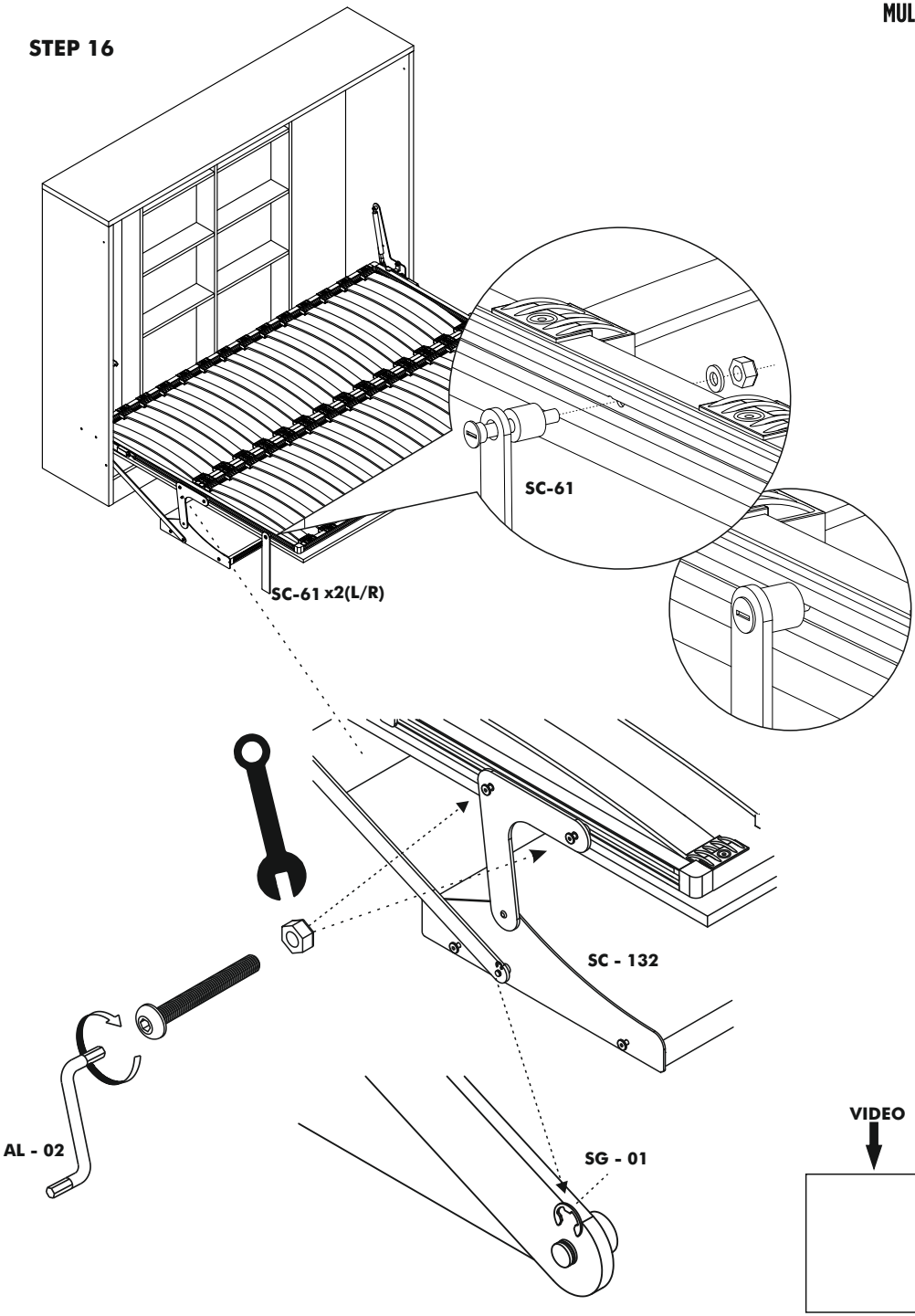

MULTiMO

STEP 17

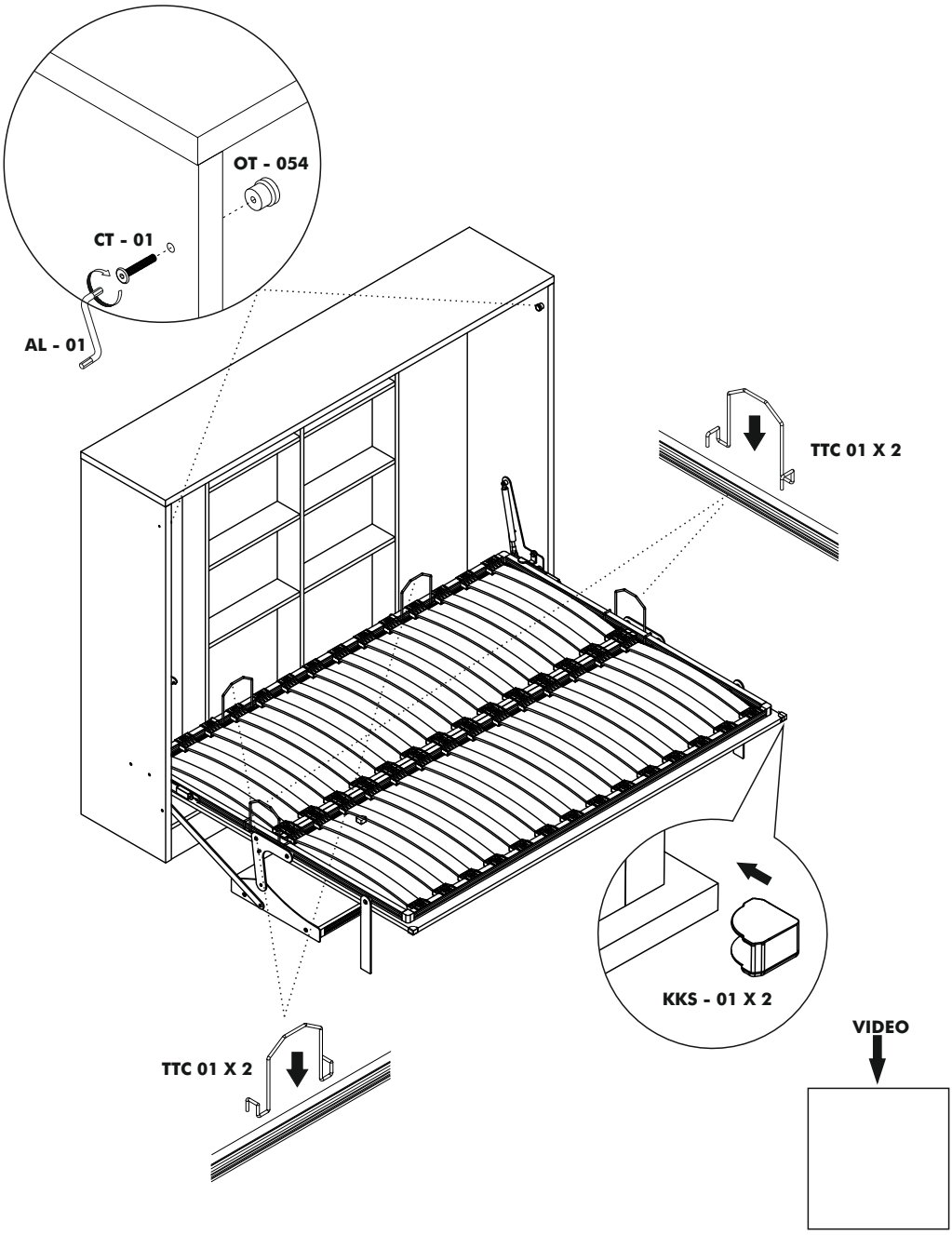

link

STEP 18

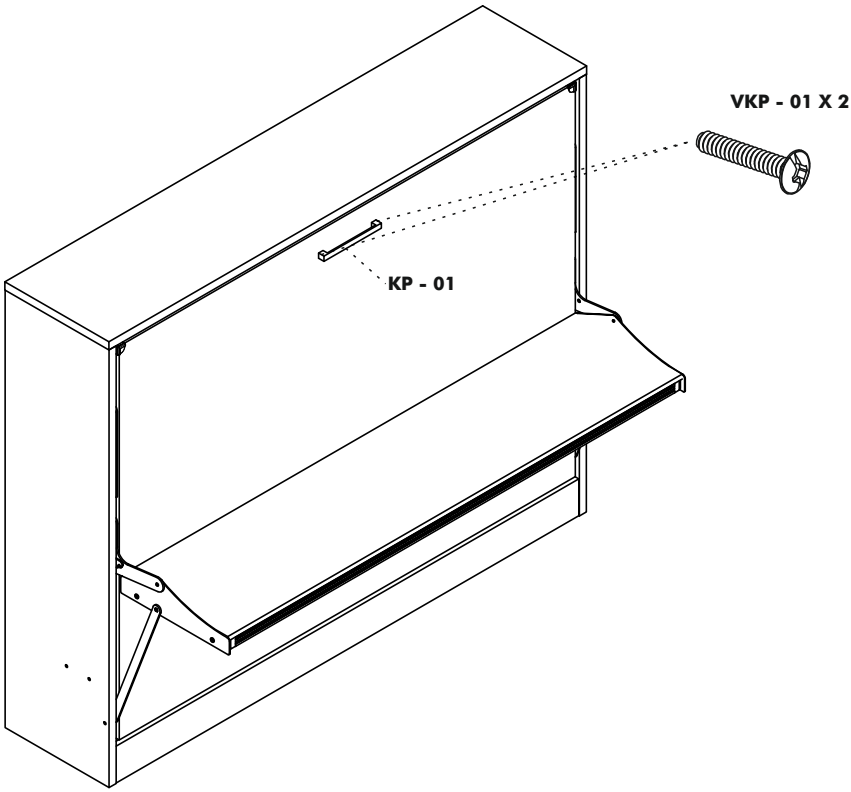

VIDEO

link

MULTiMO

STEP 19

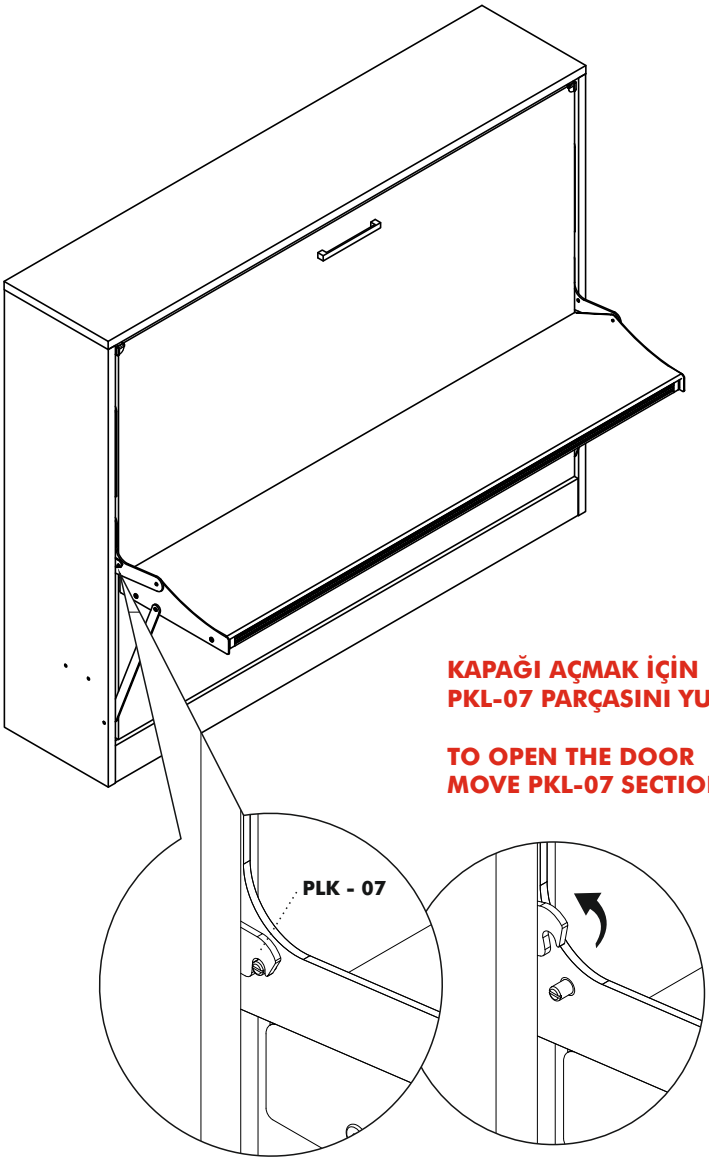

KAPAĞI AÇMAK İÇİN
PKL-07 PARÇASINI YUKARIYA KALDIR

TO OPEN THE DOOR
MOVE PKL-07 SECTION UP

VIDEO

link

ATTENTION / HOW TO / READ ME / OWNER'S GUIDE

1. When mounting on a regular drywall, furniture must be fastened to wood or metal studs. Solid walls made of brick, concrete or similar strong material are also accaptable. Do not mount furniture to paper-mache or sheet rock like material without properly aaixing to stud.

2. For safety and product longevity you must periodically inspect the mounting and mechanical connections for integrity and tightness. Confirm hardware remains properly affixed and connections snug.

3. Wall Bed mattress thickness may not exceed 8 inch. Take care to remove pillows and excess blankets before closing. Doing so keeps mechanism free of obstruction and unnecessary stress.

4. Do not lean or rest heavy objects on side or top of furniture. This may cause balance issues and compromise the integrity of your mounting connections.

5. Please use the furniture's beds, desks and shelving as intended. Not designed to be sat, stood, leaned, jumped (etc) on. Improper use may cause personal injury and damage to property.

6. With seasonal humidity change you must inspect interior and exterior of furniture.

7. Single, Twin, Twin XL beds accommodate the weight of one person. Improperly sleeping more than one person risks injury to person and damage to property.

8. Before any un-mounting or disassembly please contact Multimo for technical support and instruction. Failure to properly detach risks injury to person and damage to property.

9. For Bunk Beds:
a. Always use provided ladder when accessing top bunk.
b. Be slow, careful and aware of surroundings when opening top bunk.
c. Do not horseplay. Beds are to be slept on only.
d. Some have legs that fully extend when open- be aware of where the leg is and will be.

MULTiMO

www.multimo.com